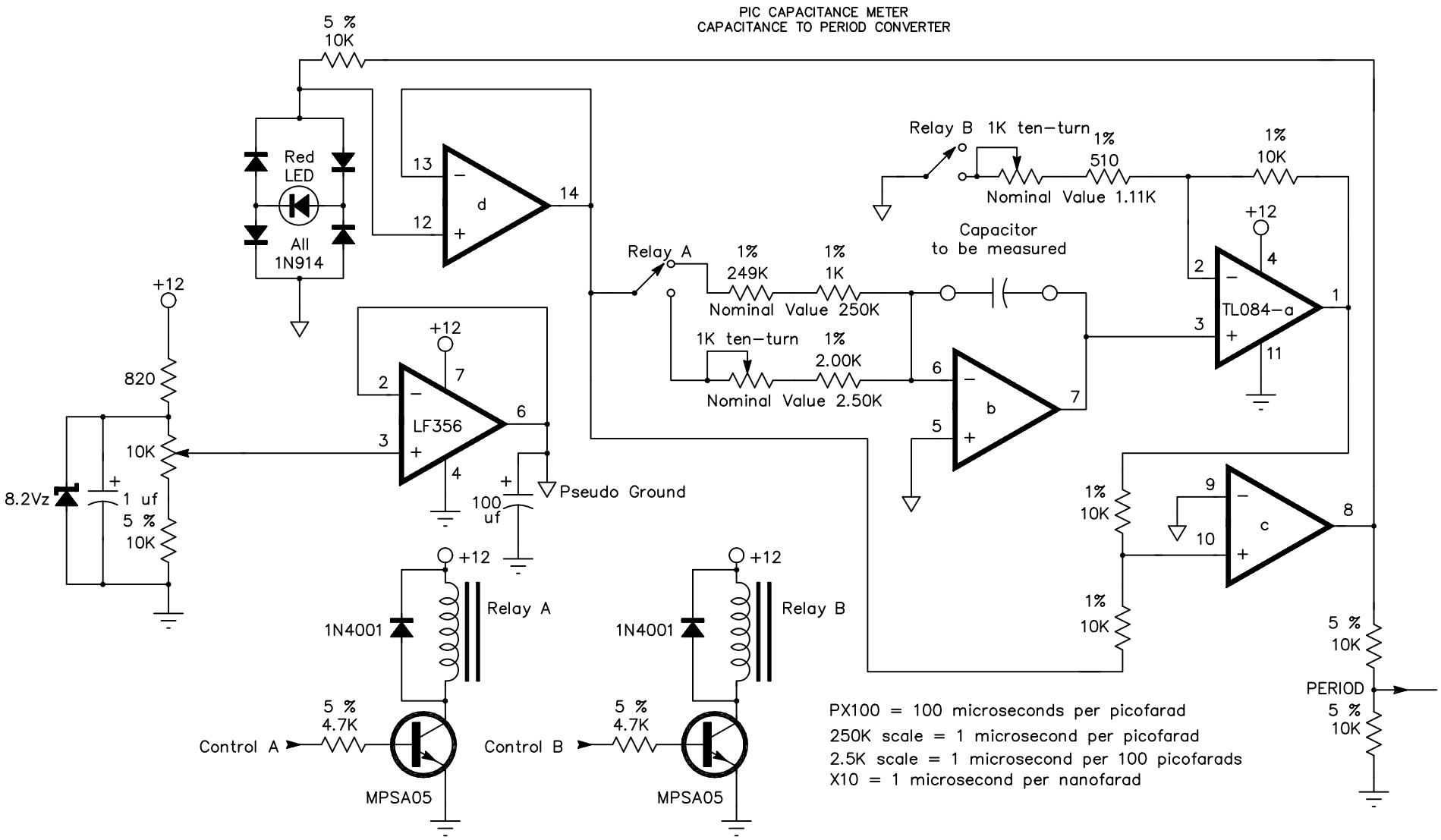
PIC CAPACITANCE METER
CAPACITANCE TO PERIOD CONVERTER
5 %
10K
Red
LED
All
1N914
13
12
d
14
+12
820
10K
8.2Vz
1 uf
5 %
10K
+12
2
7
LF356
6
3
4
100
uf
Pseudo Ground
Relay A
1%
249K
1%
1K
Nominal Value 250K
1K ten-turn
1%
2.00K
Nominal Value 2.50K
Relay B 1K ten-turn
1%
510
Nominal Value 1.11K
Capacitor
to be measured
6
5
b
7
1%
10K
+12
2
4
TL084-a
1
3
11
1%
10K
9
10
c
8
1%
10K
5 %
10K
PERIOD
5 %
10K
+12
1N4001
Relay A
5 %
4.7K
Control A
MPSA05
+12
1N4001
Relay B
5 %
4.7K
Control B
MPSA05
PX100 = 100 microseconds per picofarad
250K scale = 1 microsecond per picofarad
2.5K scale = 1 microsecond per 100 picofarads
X10 = 1 microsecond per nanofarad